| Dimension Drawing - Resistive tank sender adapter | |
|---|---|
| BPP900600100 | VE.Can resistive tank sender adapter |

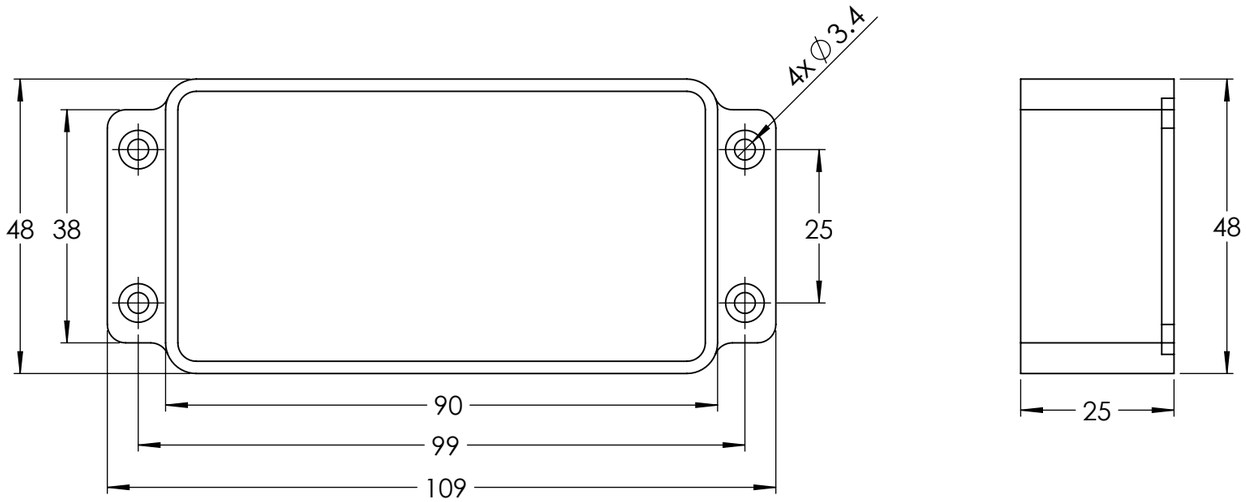


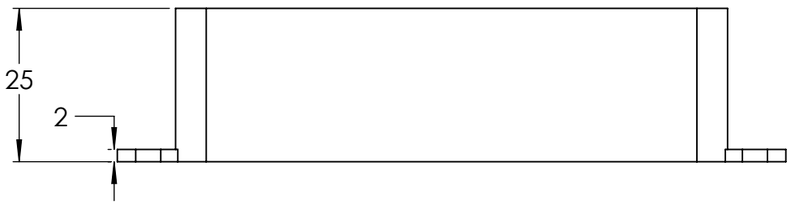


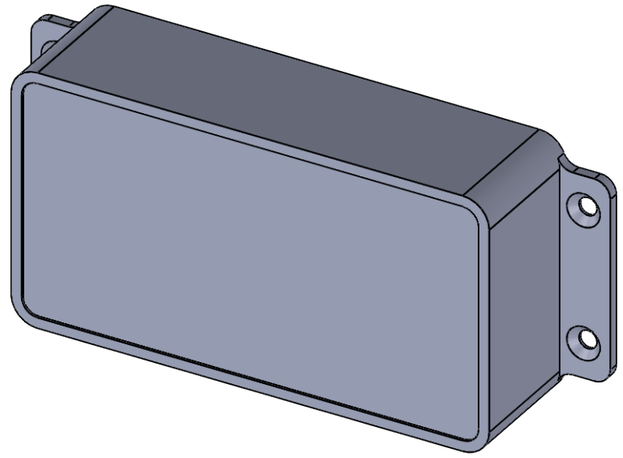

Dimensions in mm

victron energy
BLUE POWER