Dimension Drawing - MultiPlus-II	
QUA242505010	Quattro-II 24/5000/120-50-50 230V

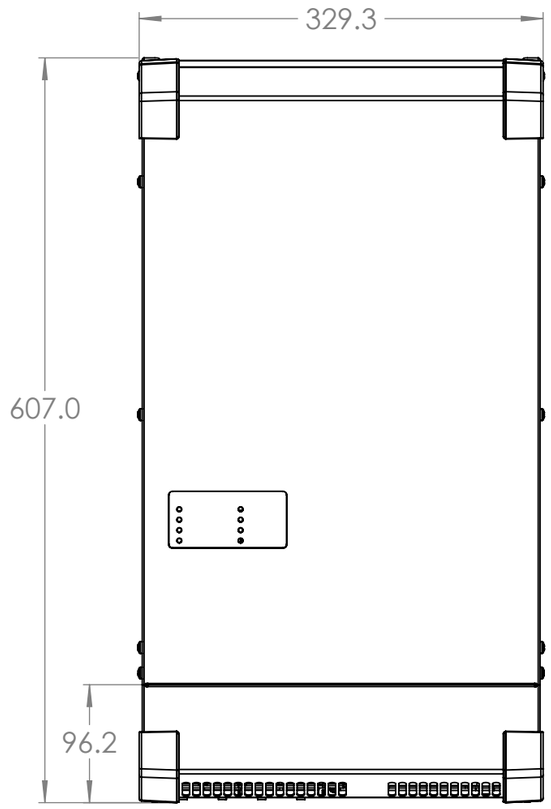

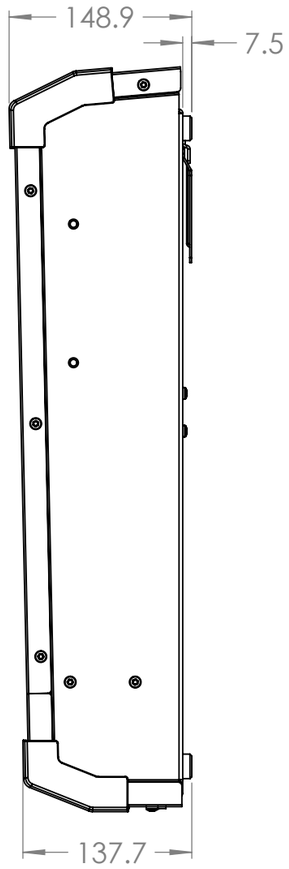

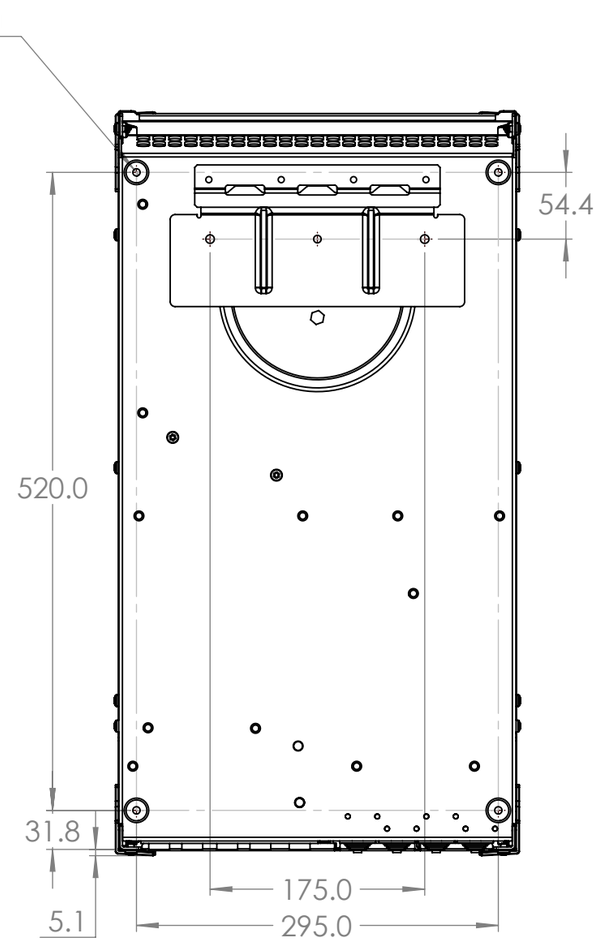

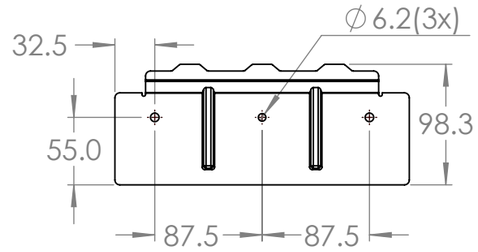

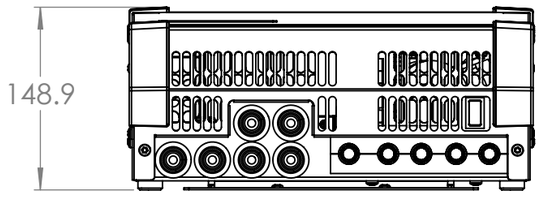

Dimensions in mm

victron energy
BLUE POWER

Rev00