Dimension Drawing - Orion	
ORI122408020	Orion 12/24-8 DC-DC converter IP20

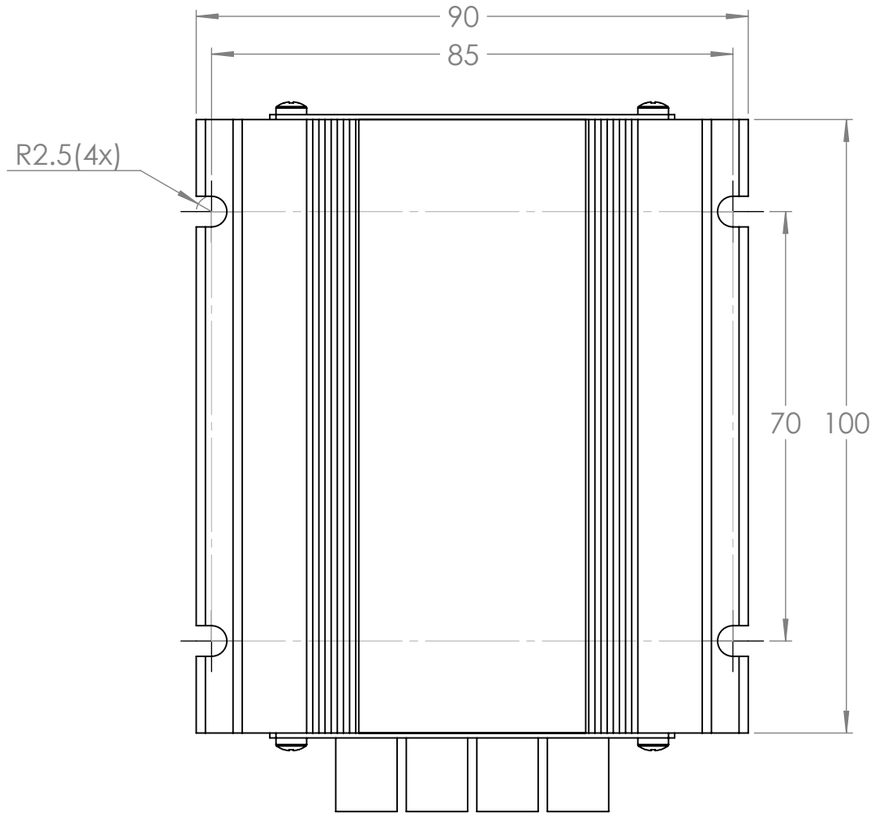

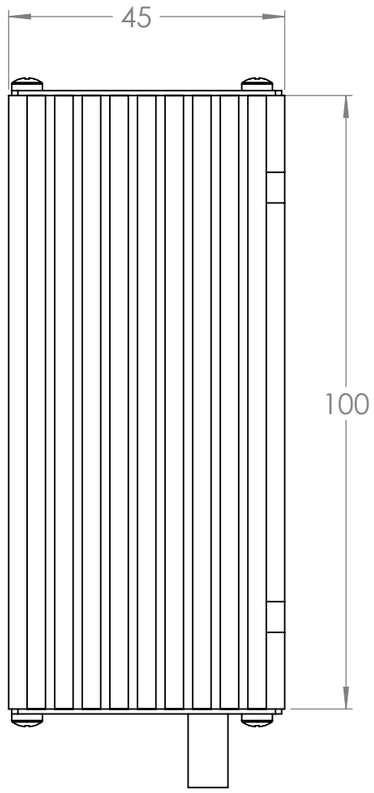

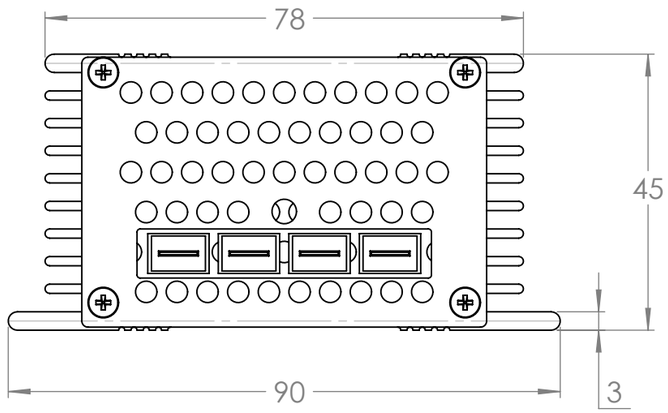

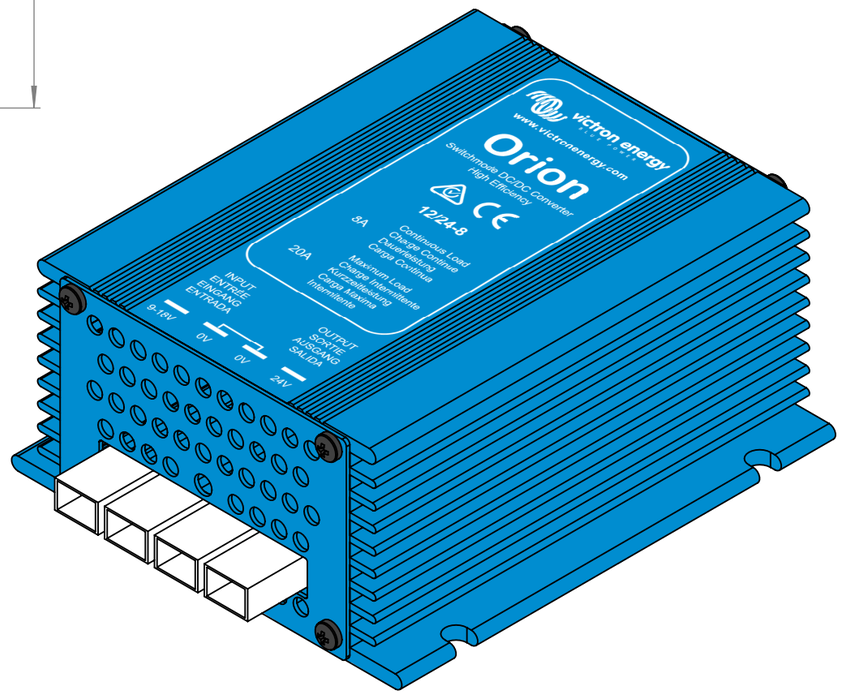

Dimensions in mm

victron energy
BLUE POWER

Rev00