Dimension Drawing - MultiPlus-II GX	
PMP482606000	MultiPlus-II 48/6k5/100-50 230V GX

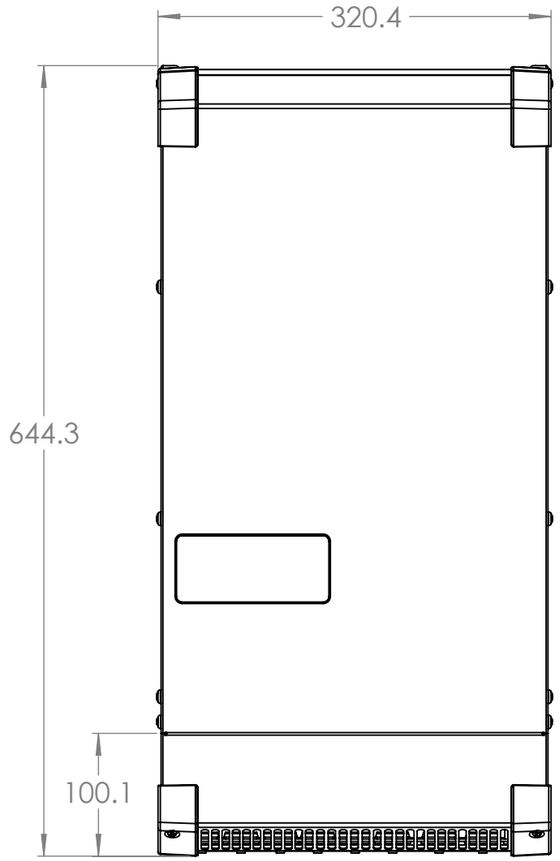

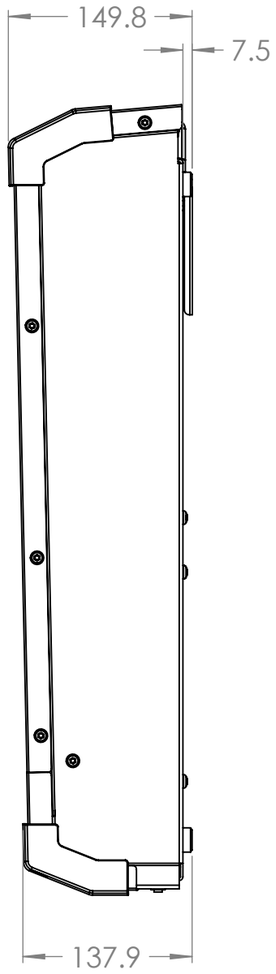

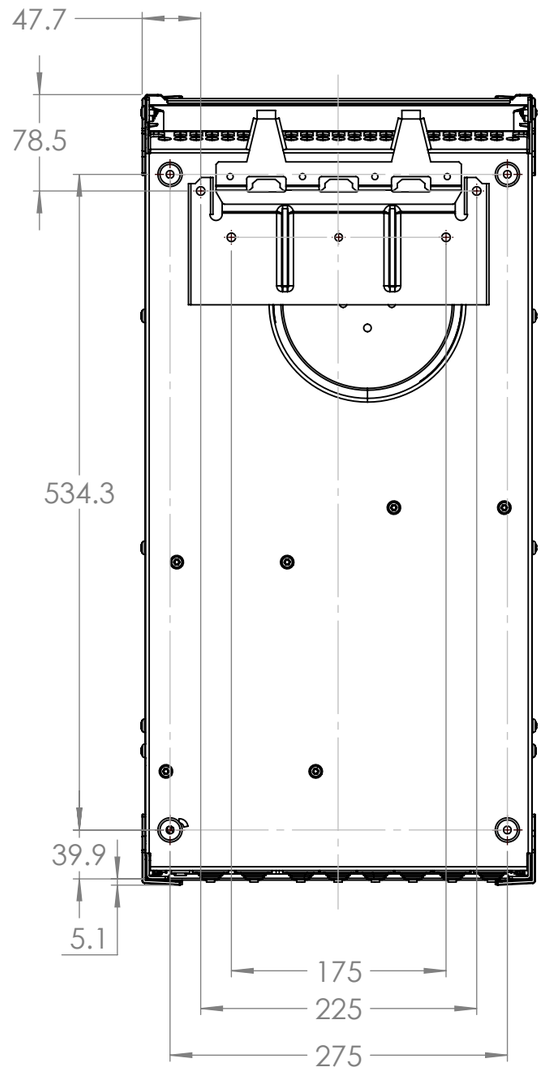

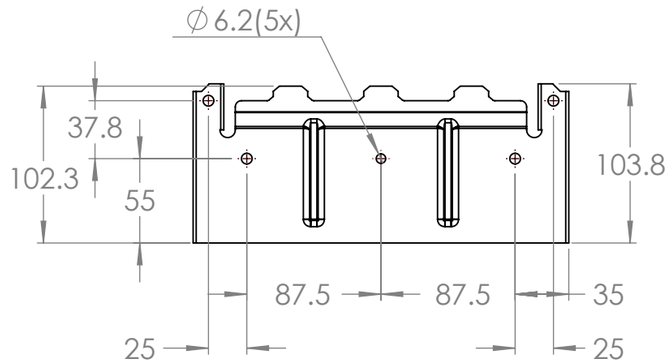

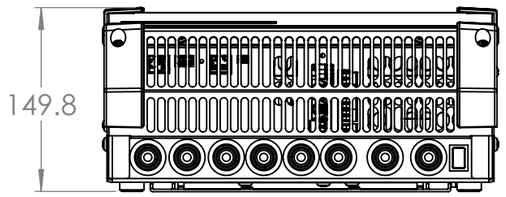

Dimensions in mm

victron energy
BLUE POWER

Rev-00