Dimension Drawing - MultiPlus-II	
PMP482305102	MultiPlus-II 48/3000/35-50 120V (UL)

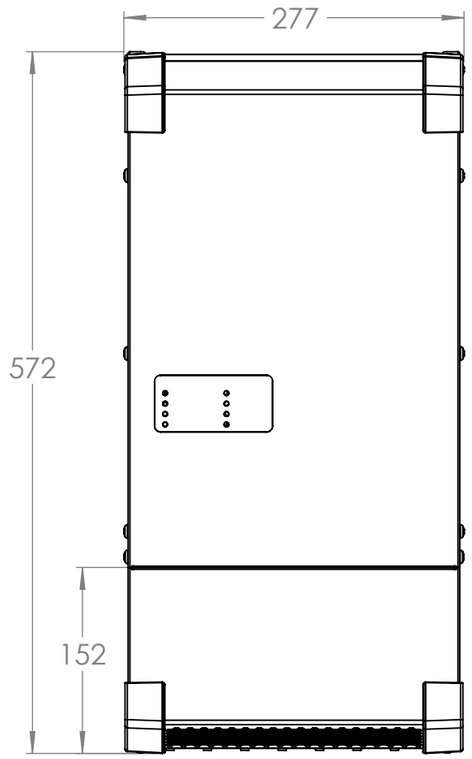

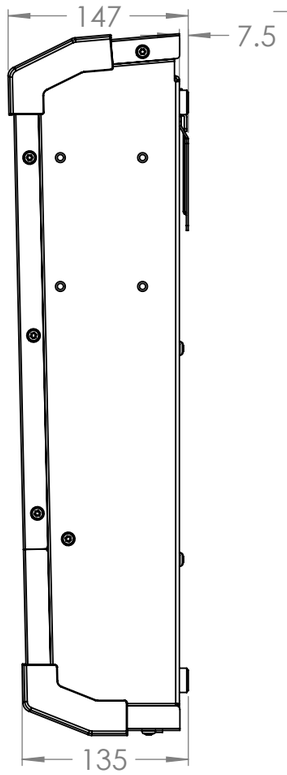

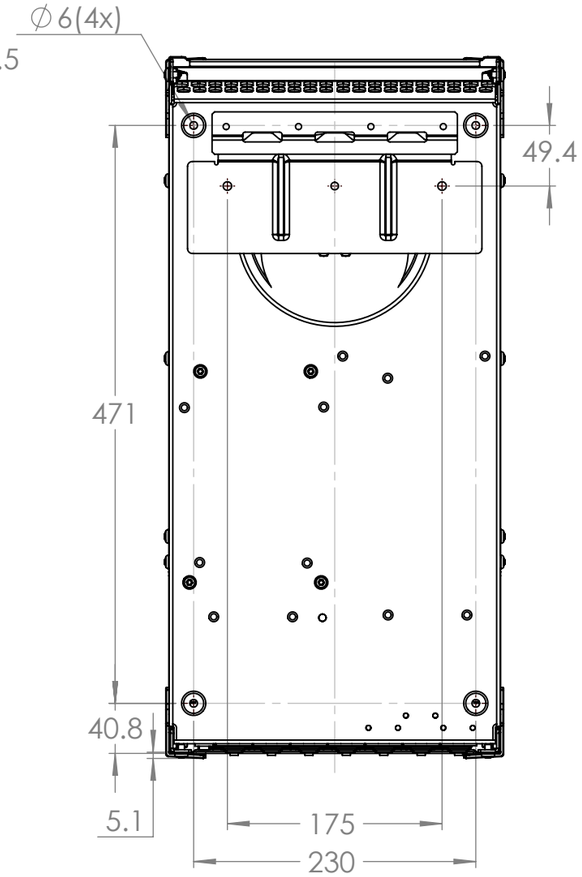

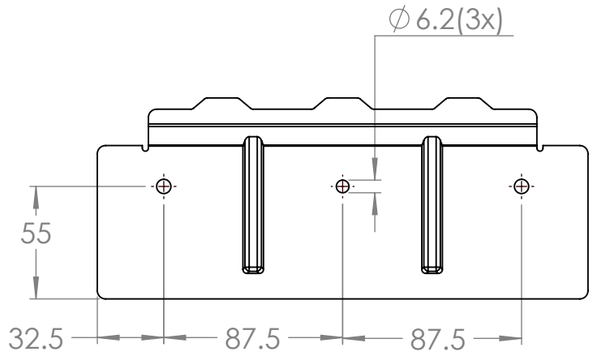

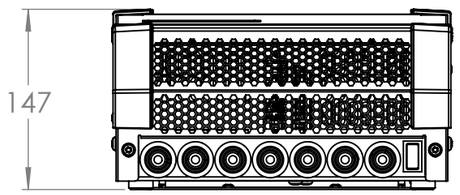

Dimensions in mm

victron energy
BLUE POWER

Rev03