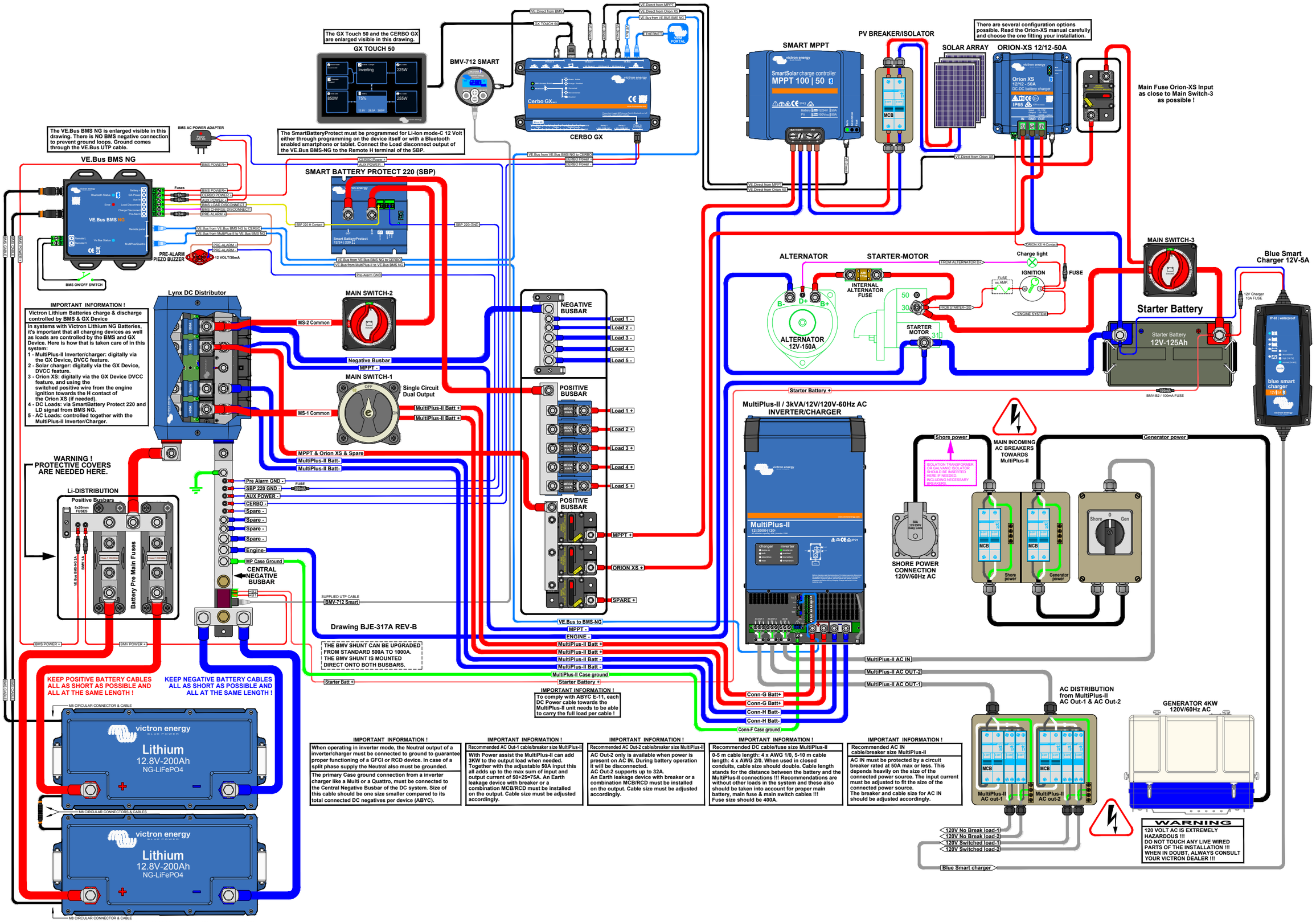
The GX Touch 50 and the CERBO GX are enlarged visible in this drawing.
GX TOUCH 50
BMV-712 SMART
CERBO GX
The VE.Bus BMS NG is enlarged visible in this drawing. There is NO BMS negative connection to prevent ground loops. Ground comes through the VE.Bus UTP cable.
BMS AC POWER ADAPTER
VE.Bus BMS NG
The SmartBatteryProtect must be programmed for Li-Ion mode-C 12 Volt either through programming on the device itself or with a Bluetooth enabled smartphone or tablet. Connect the Load disconnect output of the VE.Bus BMS-NG to the Remote H terminal of the SBP.
SMART BATTERY PROTECT 220 (SBP)
PRE-ALARM PIEZO BUZZER
BMS ON/OFF SWITCH
IMPORTANT INFORMATION !
Victron Lithium Batteries charge & discharge controlled by BMS & GX Device
In systems with Victron Lithium NG Batteries, it's important that all charging devices as well as loads are controlled by the BMS and GX Device. Here is how that is taken care of in this system:
1 - MultiPlus-II Inverter/charger: digitally via the GX Device, DVCC feature.
2 - Solar charger: digitally via the GX Device, DVCC feature.
3 - Orion XS: digitally via the GX Device DVCC feature, and using the switched positive wire from the engine ignition towards the H contact of the Orion XS (if needed).
4 - DC Loads: via SmartBattery Protect 220 and LD signal from BMS NG.
5 - AC Loads: controlled together with the MultiPlus-II Inverter/Charger.
Lynx DC Distributor
MAIN SWITCH-2
MAIN SWITCH-1
Single Circuit Dual Output
NEGATIVE BUSBAR
POSITIVE BUSBAR
WARNING ! PROTECTIVE COVERS ARE NEEDED HERE.
Li-DISTRIBUTION
Positive Busbars
Battery Pre Main Fuses
CENTRAL NEGATIVE BUSBAR
Drawing BJE-317A REV-B
THE BMV SHUNT CAN BE UPGRADED FROM STANDARD 500A TO 1000A. THE BMV SHUNT IS MOUNTED DIRECT ONTO BOTH BUSBARS.
IMPORTANT INFORMATION ! To comply with ABYC E-11, each DC Power cable towards the MultiPlus-II unit needs to be able to carry the full load per cable !
KEEP POSITIVE BATTERY CABLES ALL AS SHORT AS POSSIBLE AND ALL AT THE SAME LENGTH !
KEEP NEGATIVE BATTERY CABLES ALL AS SHORT AS POSSIBLE AND ALL AT THE SAME LENGTH !
Lithium 12.8V-200Ah NG-LiFePO4
2 x Lithium 12.8V-200Ah NG LiFePO4
SMART MPPT
PV BREAKER/ISOLATOR
SOLAR ARRAY
ORION-XS 12/12-50A
There are several configuration options possible. Read the Orion-XS manual carefully and choose the one fitting your installation.
Main Fuse Orion-XS Input as close to Main Switch-3 as possible !
ALTERNATOR
STARTER-MOTOR
INTERNAL ALTERNATOR FUSE
ALTERNATOR 12V-150A
STARTER MOTOR
Charge light
IGNITION
FUSE
MAIN SWITCH-3
Starter Battery
Starter Battery 12V-125Ah
Blue Smart Charger 12V-5A
MultiPlus-II / 3kVA/12V/120V-60Hz AC INVERTER/CHARGER
MAIN INCOMING AC BREAKERS TOWARDS MultiPlus-II
Shore power
Generator power
SHORE POWER CONNECTION 120V/60Hz AC
AC DISTRIBUTION from MultiPlus-II AC Out-1 & AC Out-2
GENERATOR 4KW 120V/60Hz AC
WARNING 120 VOLT AC IS EXTREMELY HAZARDOUS !!! DO NOT TOUCH ANY LIVE WIRED PARTS OF THE INSTALLATION !!! WHEN IN DOUBT, ALWAYS CONSULT YOUR VICTRON DEALER !!!
IMPORTANT INFORMATION ! When operating in inverter mode, the Neutral output of a inverter/charger must be connected to ground to guarantee proper functioning of a GFCI or RCD device. In case of a split phase supply the Neutral also must be grounded. The primary Case ground connection from a inverter charger like a Multi or a Quattro, must be connected to the Central Negative Busbar of the DC system. Size of this cable should be one size smaller compared to its total connected DC negatives per device (ABYC).
IMPORTANT INFORMATION ! Recommended AC Out-1 cable/breaker size MultiPlus-II: With Power assist the MultiPlus-II can add 3KW to the output load when needed. Together with the adjustable 50A input this all adds up to the max sum of input and output current of 50+25=75A. An Earth leakage device with breaker or a combination MCB/RCD must be installed on the output. Cable size must be adjusted accordingly.
IMPORTANT INFORMATION ! Recommended AC Out-2 cable/breaker size MultiPlus-II: AC Out-2 only is available when power is present on AC IN. During battery operation it will be disconnected. AC Out-2 supports up to 32A. An Earth leakage device with breaker or a combination MCB/RCD must be installed on the output. Cable size must be adjusted accordingly.
IMPORTANT INFORMATION ! Recommended DC cable/fuse size MultiPlus-II: 0-5 m cable length: 4 x AWG 1/0, 5-10 m cable length: 4 x AWG 2/0. When used in closed conduits, cable size should double. Cable length stands for the distance between the battery and the MultiPlus-II connections !!! Recommendations are without other loads in the system and these also should be taken into account for proper main battery, main fuse & main switch cables !!! Fuse size should be 400A.
IMPORTANT INFORMATION ! Recommended AC IN cable/breaker size MultiPlus-II: AC IN must be protected by a circuit breaker rated at 50A max or less. This depends heavily on the size of the connected power source. The input current must be adjusted to fit the size of the connected power source. The breaker and cable size for AC IN should be adjusted accordingly.