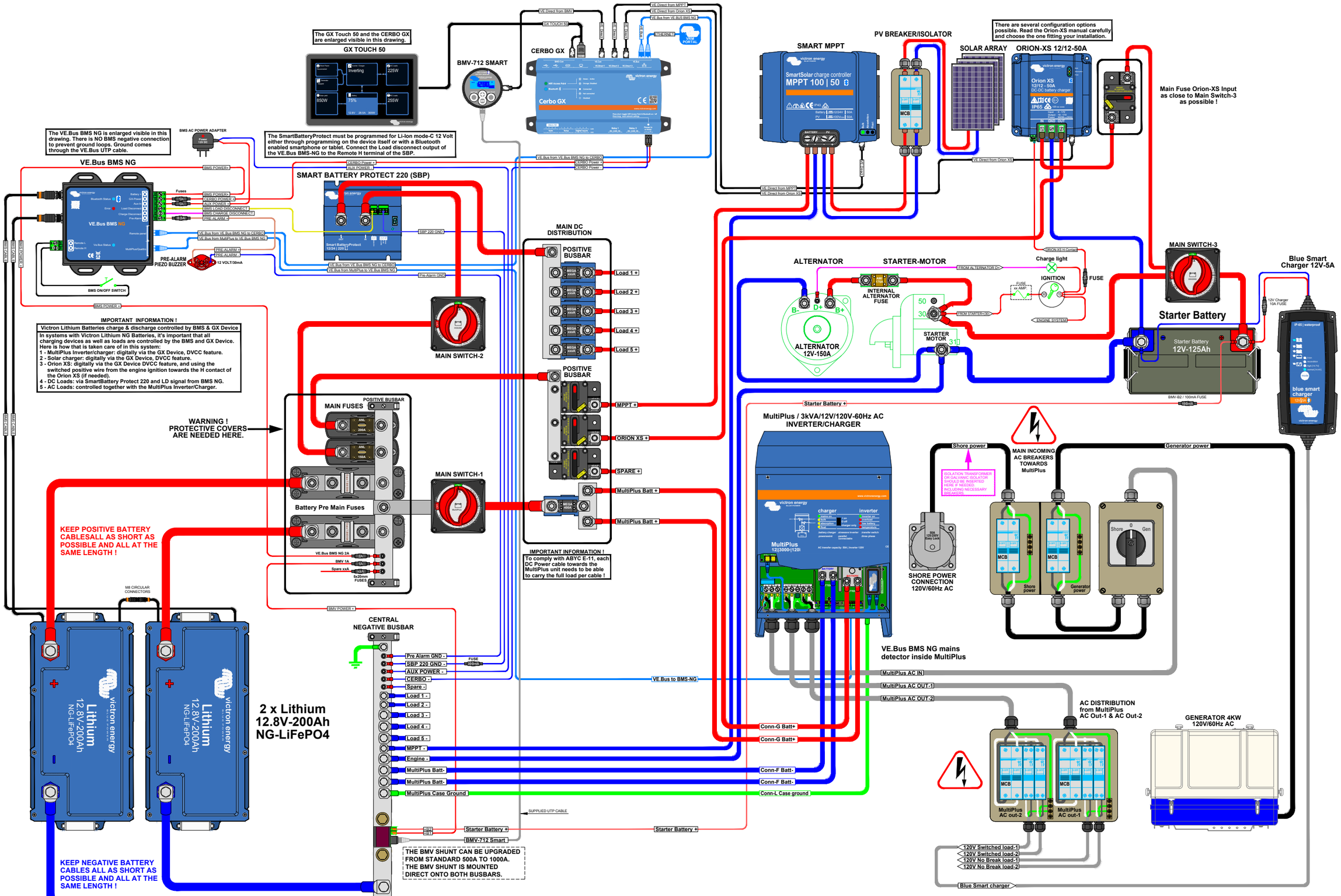

IMPORTANT INFORMATION !

When operating in inverter mode, the Neutral output of a inverter/charger must be connected to ground to guarantee proper functioning of a GFCI or RCD device. In case of a split phase supply the Neutral also must be grounded.

The primary Case ground connection from a inverter charger like a Multi or a Quattro, must be connected to the Central Negative Busbar of the DC system. Size of this cable should be one size smaller compared to its total connected DC negatives per device (ABYC).

IMPORTANT INFORMATION !

Recommended AC Out-1 cable/breaker size MultiPlus

With Power assist the MultiPlus can add 3KW to the output load when needed. Together with the adjustable 50A input this all adds up to the max sum of input and output current of 50+25=75A. An Earth leakage device with breaker or a combination MCB/RCD must be installed on the output. Cable size must be adjusted accordingly.

IMPORTANT INFORMATION !

Recommended AC Out-2 cable/breaker size MultiPlus

AC Out-2 only is available when power is present on AC IN. During battery operation it will be disconnected.
AC Out-2 supports up to 25A.
An Earth leakage device with breaker or a combination MCB/RCD must be installed on the output. Cable size must be adjusted accordingly.

IMPORTANT INFORMATION !

Recommended DC cable/fuse size MultiPlus

0-5 m cable length: 4 x AWG 1/0. 5-10 m cable length: 4 x AWG 2/0. When used in closed conduits, cable size should double. Cable length stands for the distance between the battery and the MultiPlus connections !!! Recommendations are without other loads in the system and these also should be taken into account for proper main battery, main fuse & main switch cables !!!
Fuse size should be 400A.

IMPORTANT INFORMATION !

Recommended AC IN cable/breaker size MultiPlus

AC IN must be protected by a circuit breaker rated at 50A max or less. This depends heavily on the size of the connected power source. The input current must be adjusted to fit the size of the connected power source.
The breaker and cable size for AC IN should be adjusted accordingly.

WARNING

120 VOLT AC IS EXTREMELY HAZARDOUS !!!
DO NOT TOUCH ANY LIVE WIRED PARTS OF THE INSTALLATION !!!
WHEN IN DOUBT, ALWAYS CONSULT YOUR VICTRON DEALER !!!