Dimension Drawing - LiFePO4 (NG)	
BAT548110620	LiFePO4 Battery 51,2V/100Ah NG

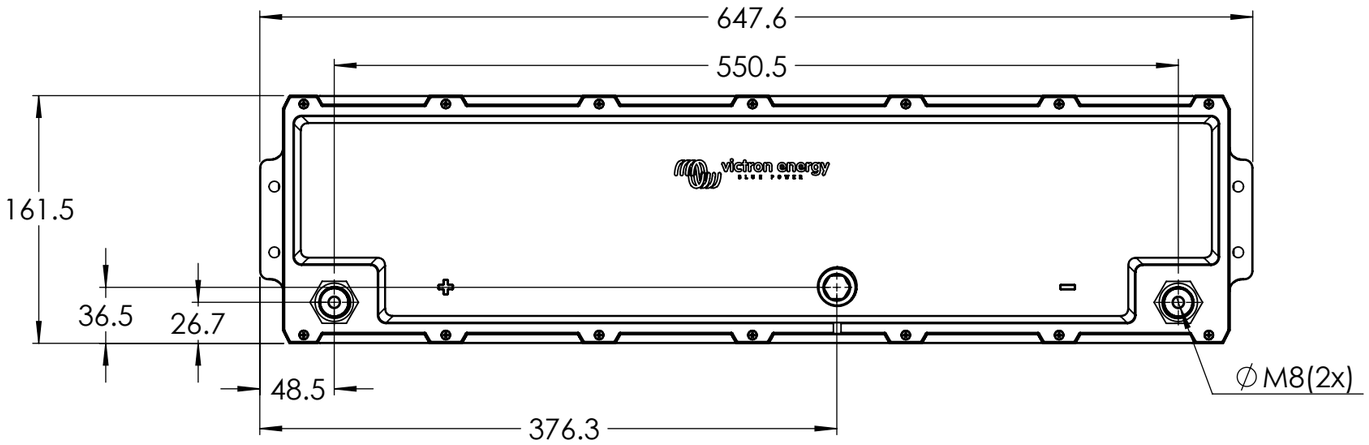

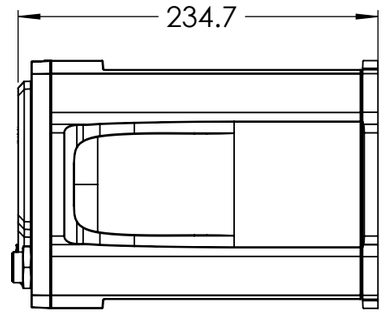

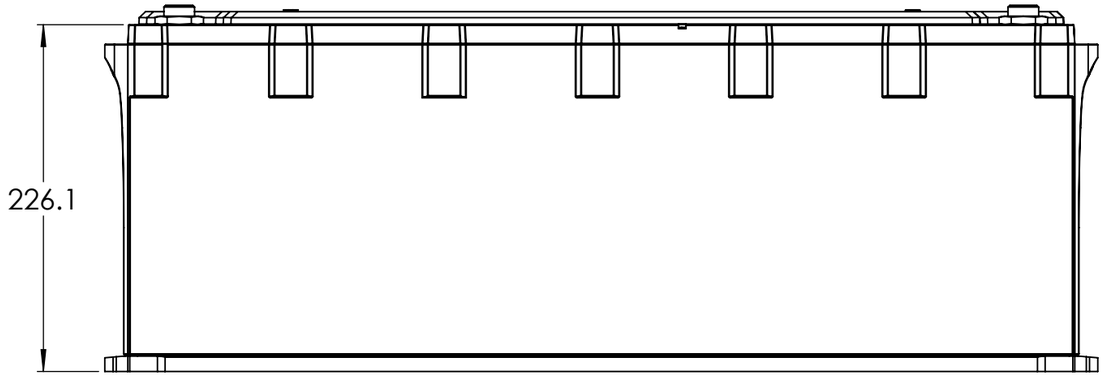

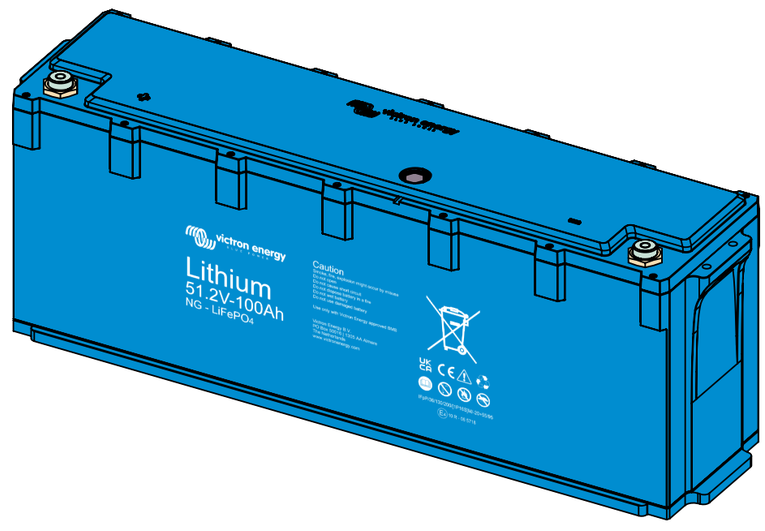

Dimensions in mm

victron energy
BLUE POWER

Rev00