Dimension Drawing - LiFePO4 (Smart)	
BAT524110610	LiFePO4 Battery 25,6V/100Ah Smart

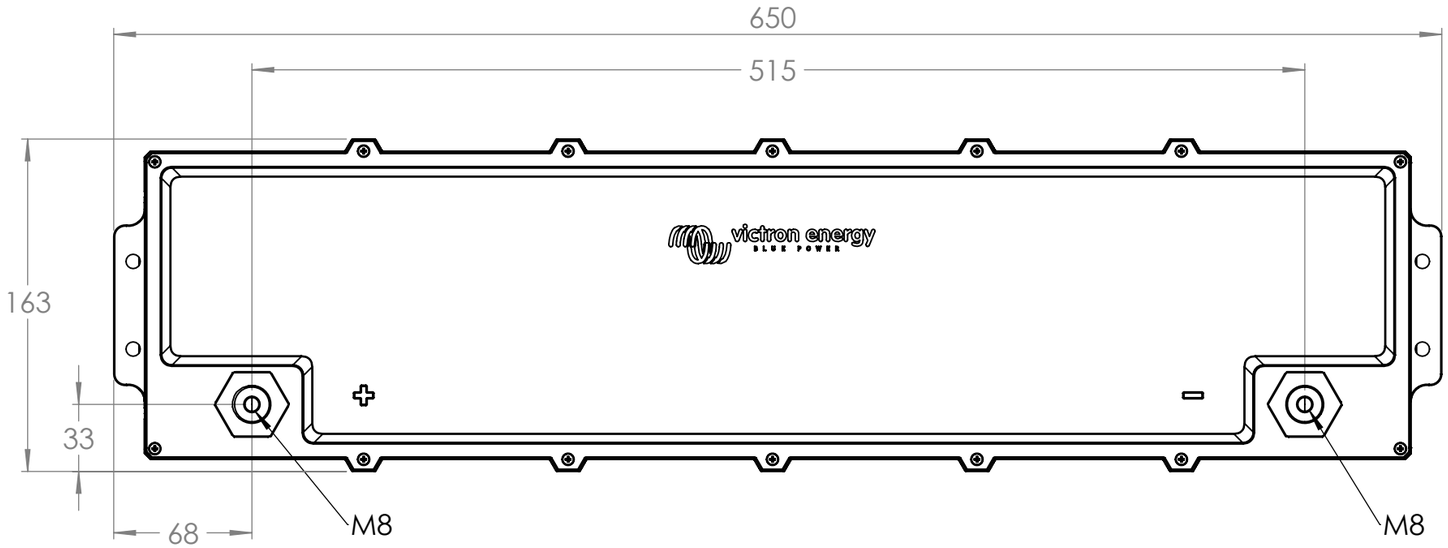

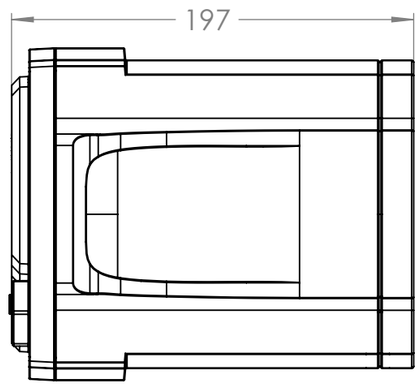

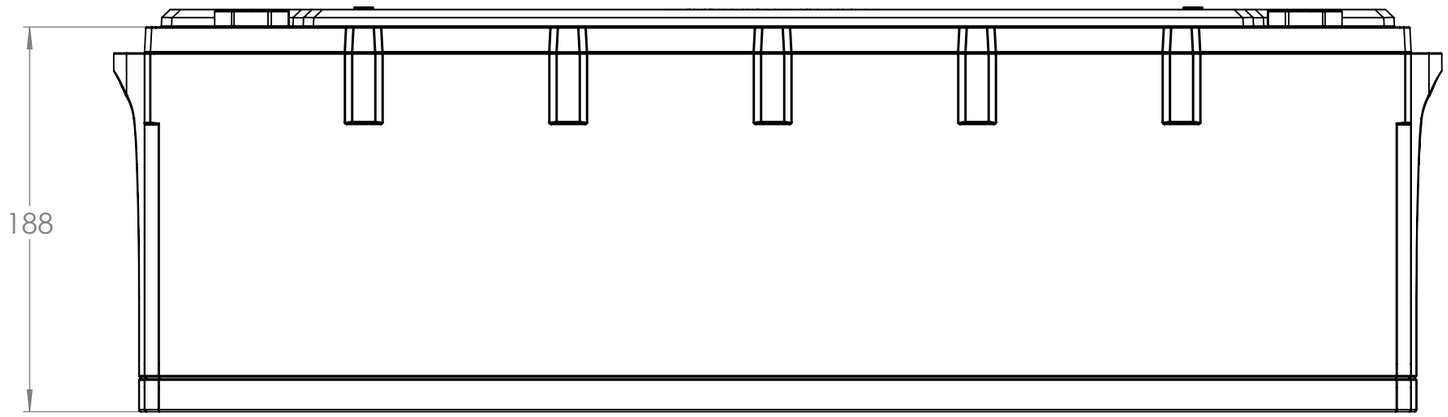

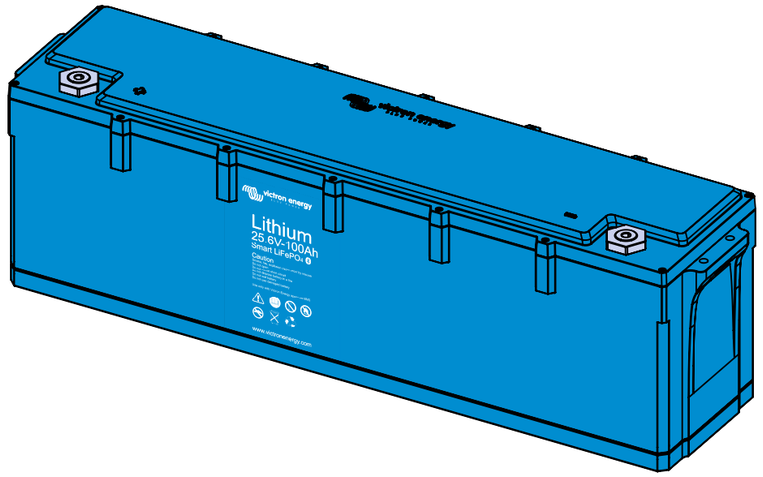

Dimensions in mm

victron energy
BLUE POWER

Rev00