Dimension Drawing - GX Touch 50 Wall Mount	
BPP900465050	GX Touch 50 Wall Mount

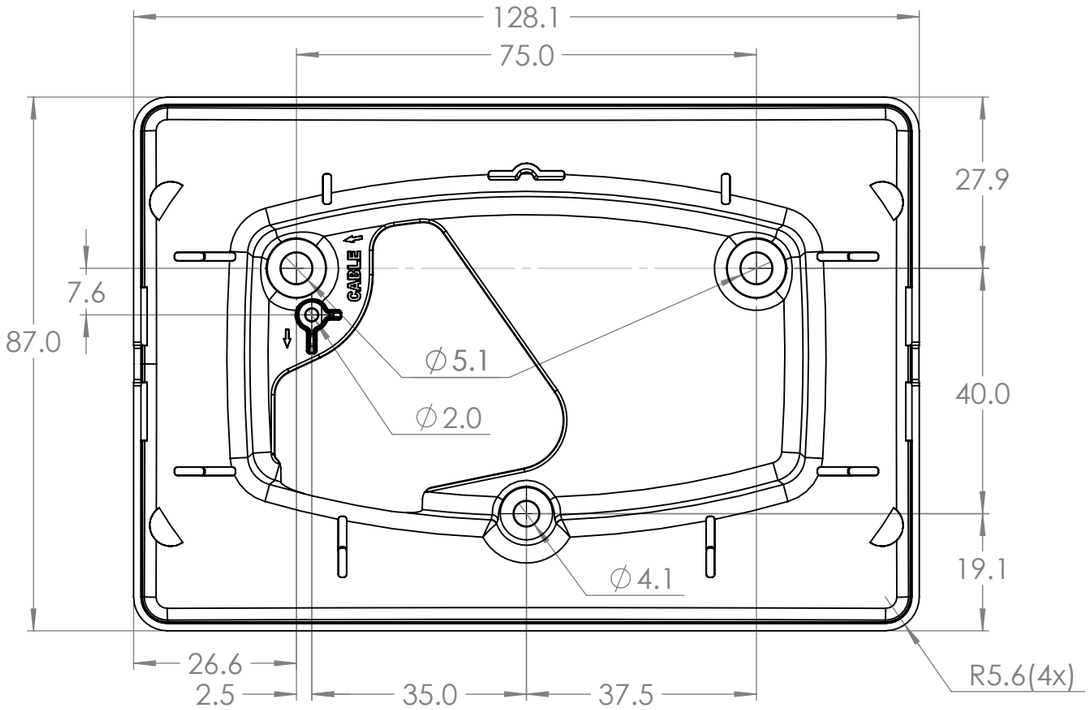

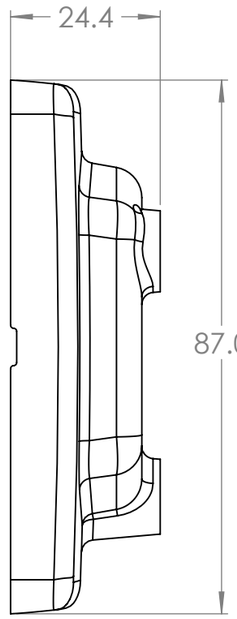

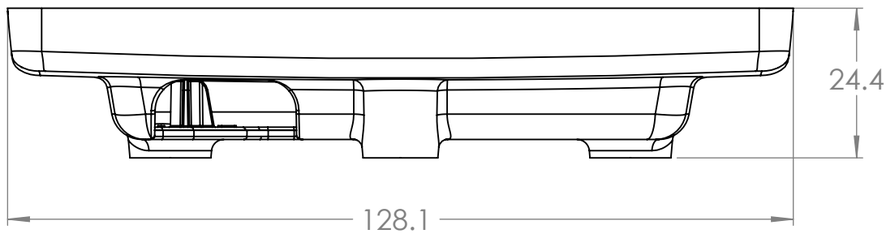

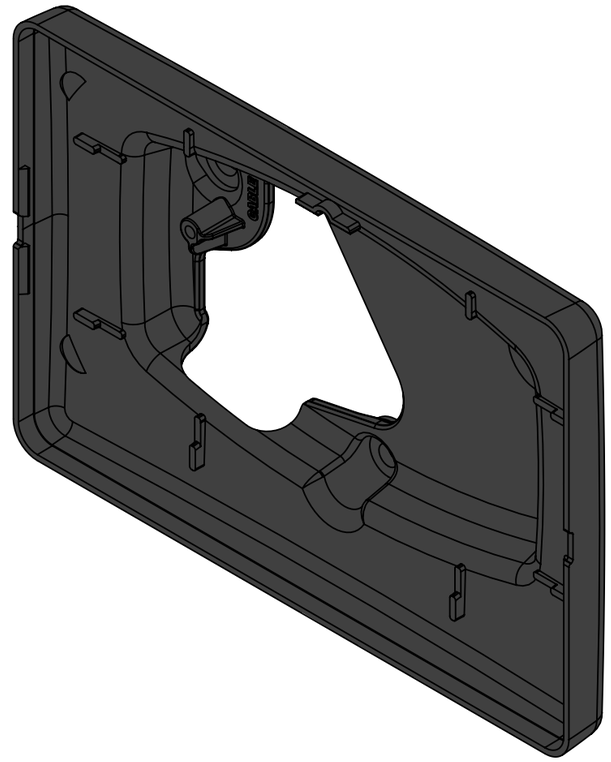

Dimensions in mm

victron energy
BLUE POWER

Rev00