Dimension Drawing - EV Charging station	
EVC300400300	EV Charging station

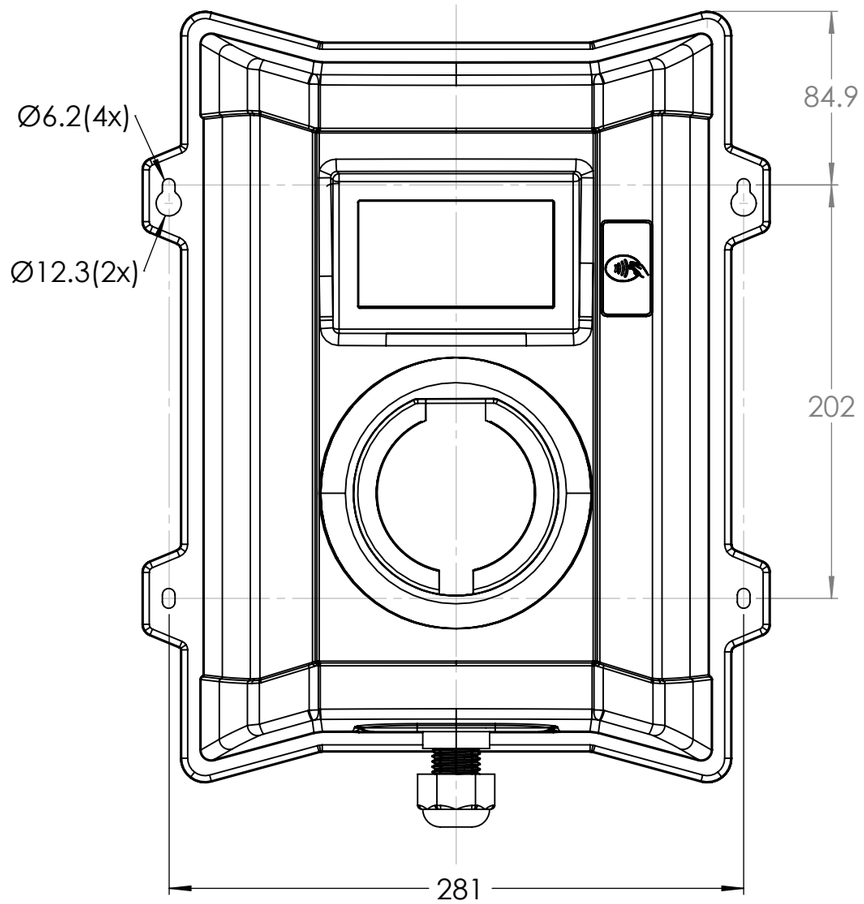

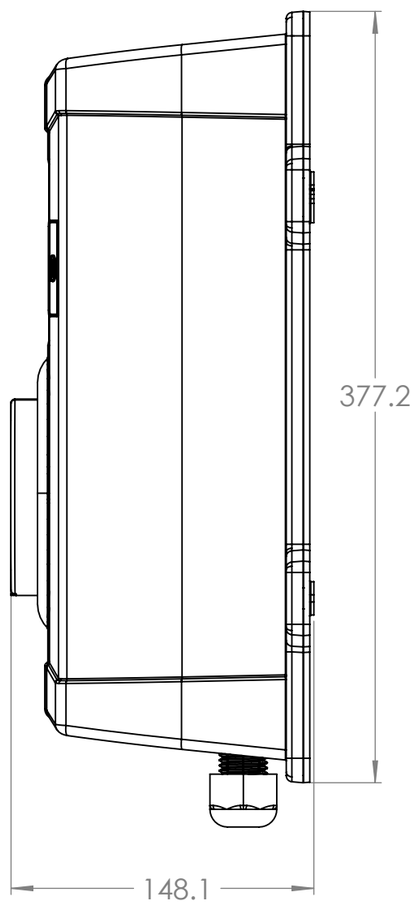

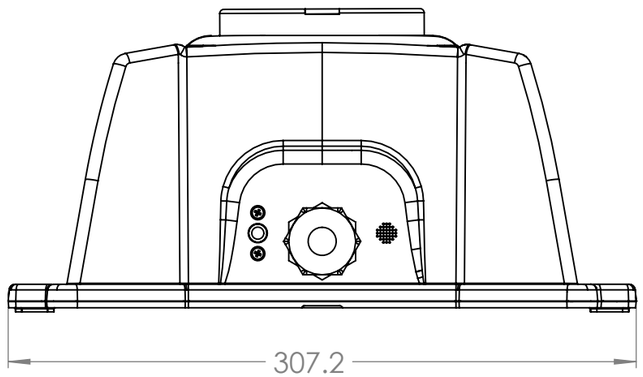

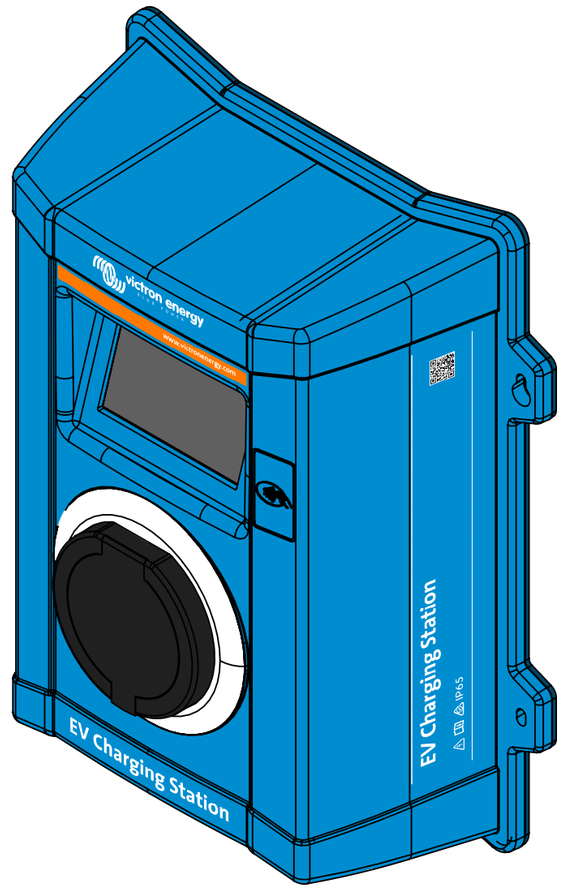

Dimensions in mm

victron energy
BLUE POWER

Rev00