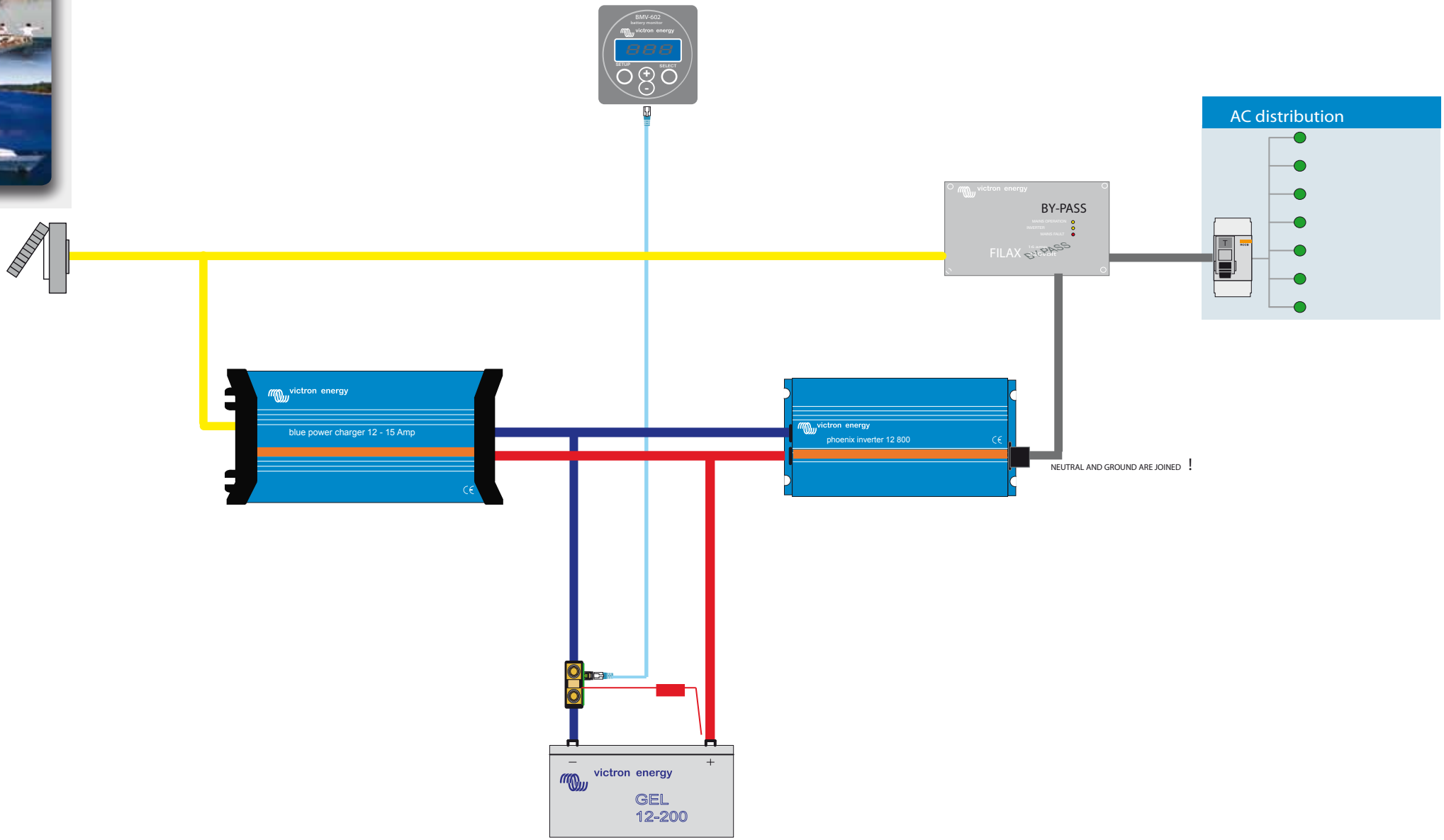BLUE POWER CHARGER AND INVERTER