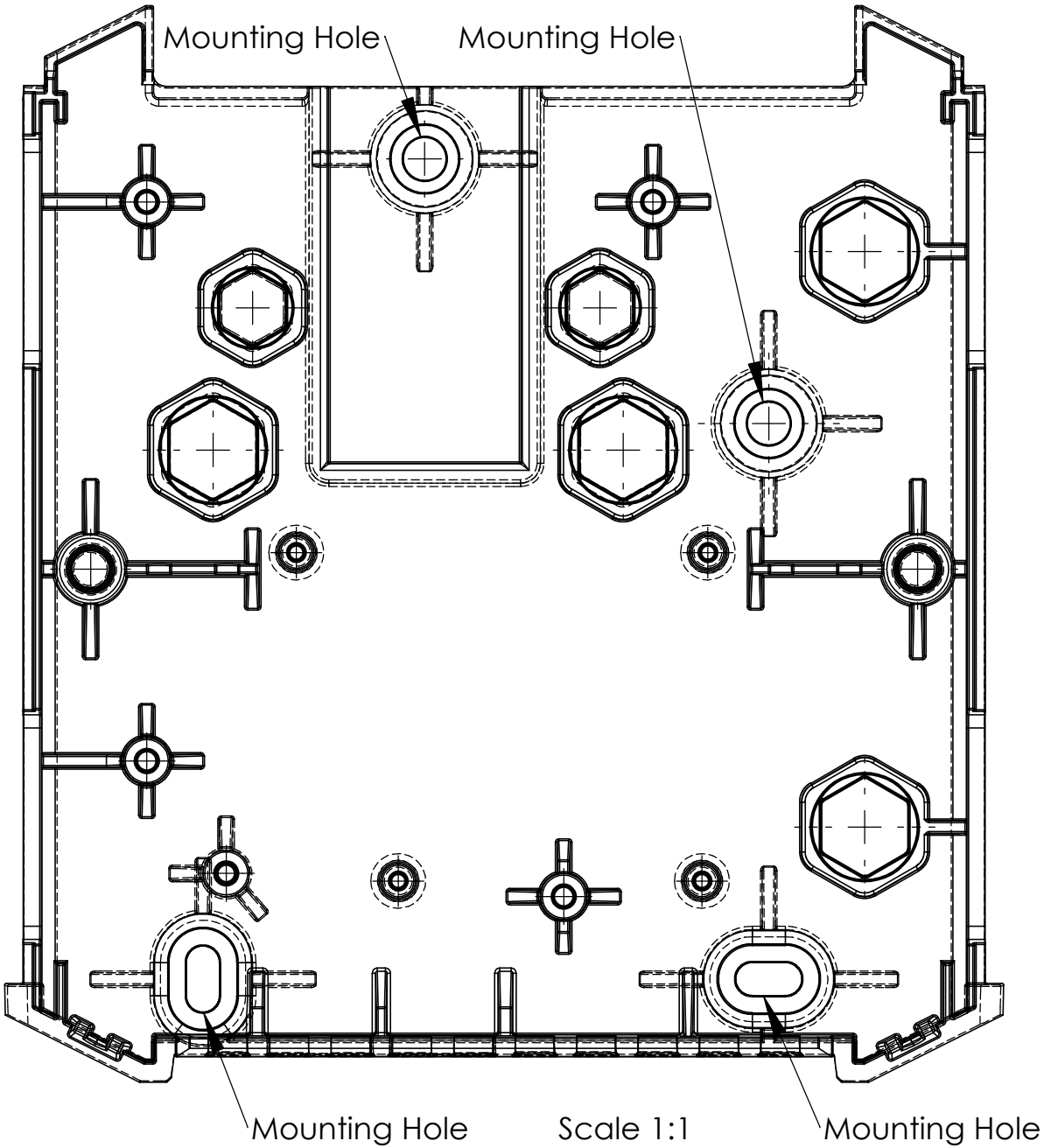

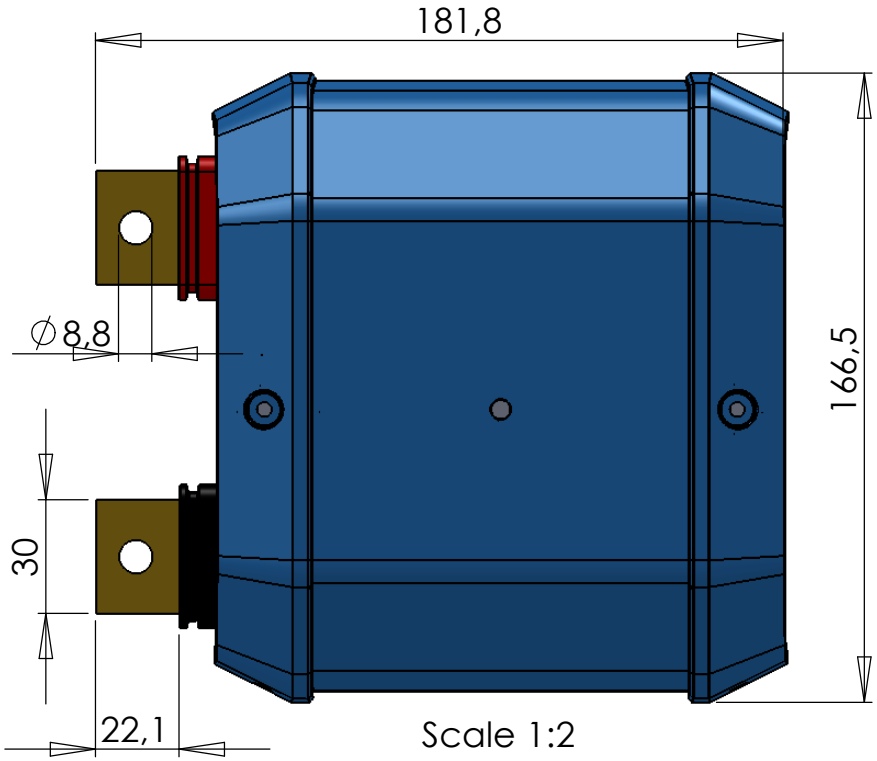

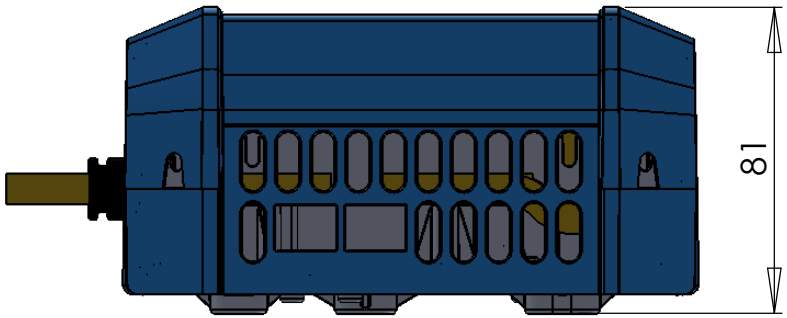

victron energy
BLUE POWER

Dimensions in mm