Dimension Drawing - Buck-Boost DC/DC converter	
ORI303100000	100A Buck-Boost DC/DC converter

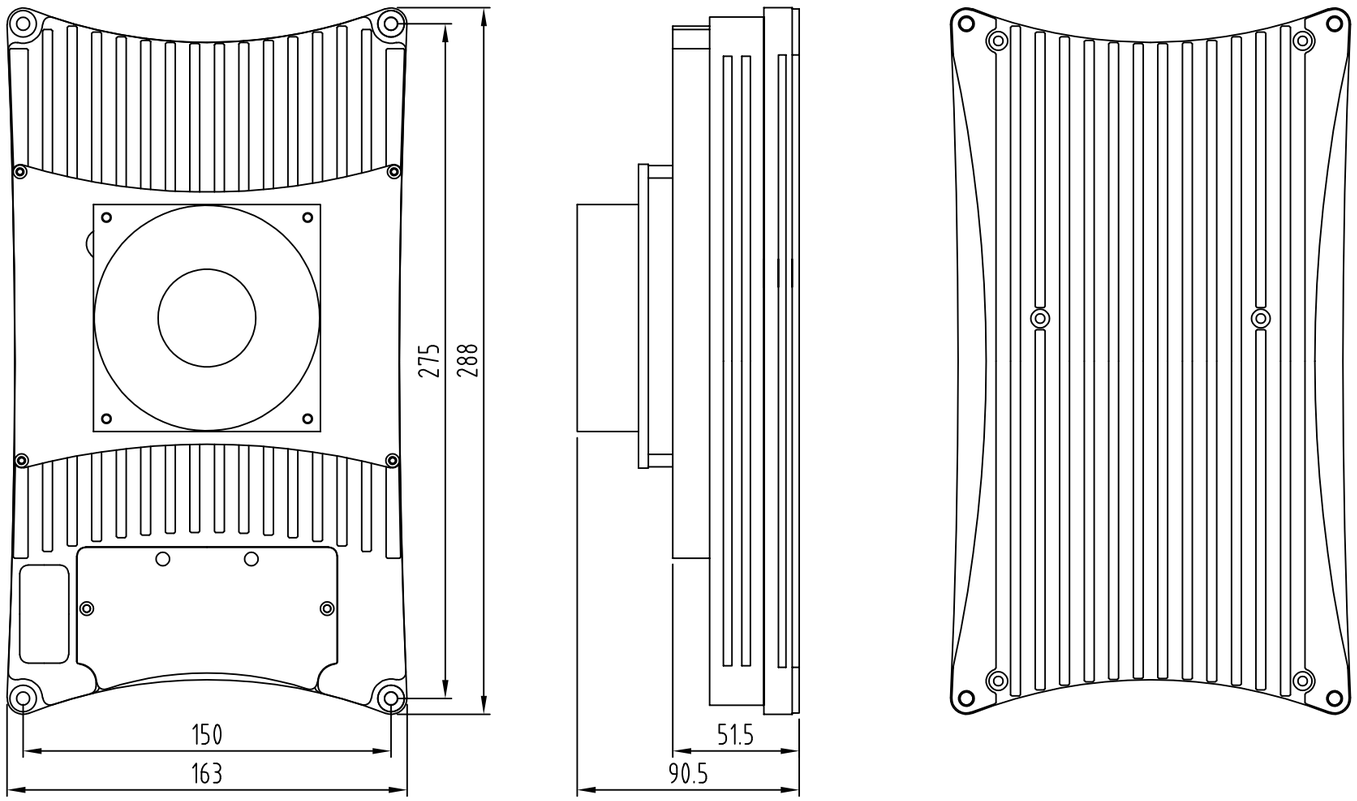

Dimensions in mm

victron energy
BLUE POWER