Dimension Drawing - SS MPPT 450/100	
SCC145110510	SmartSolar MPPT RS 450/100-MC4

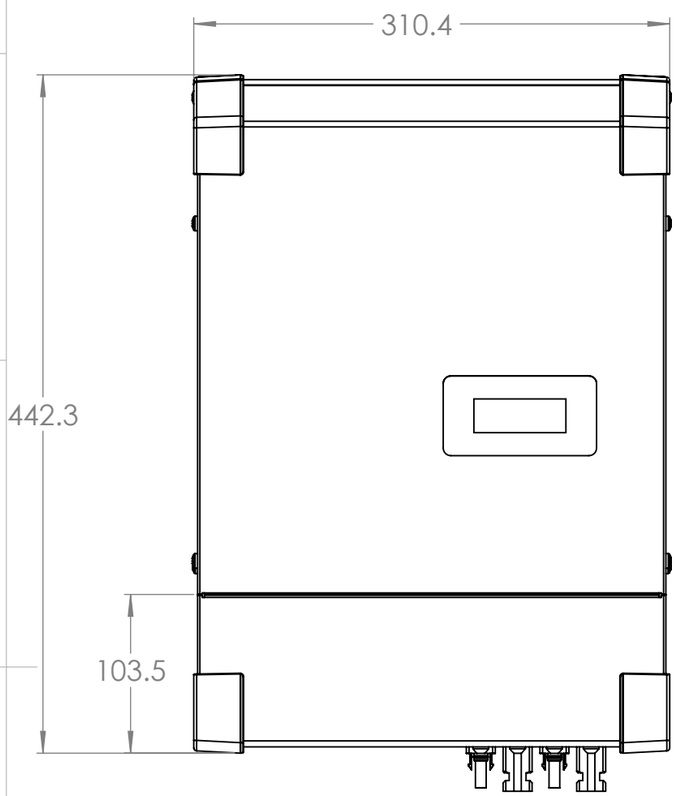

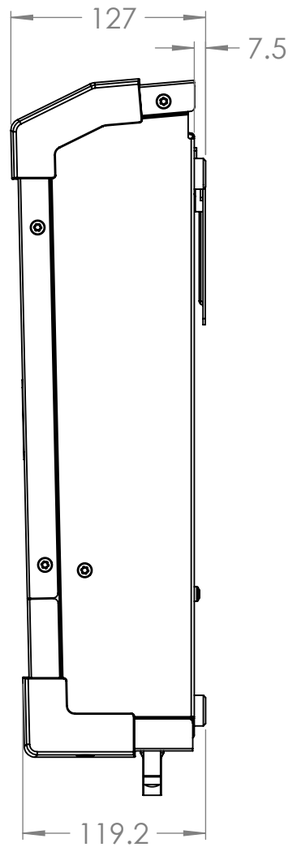

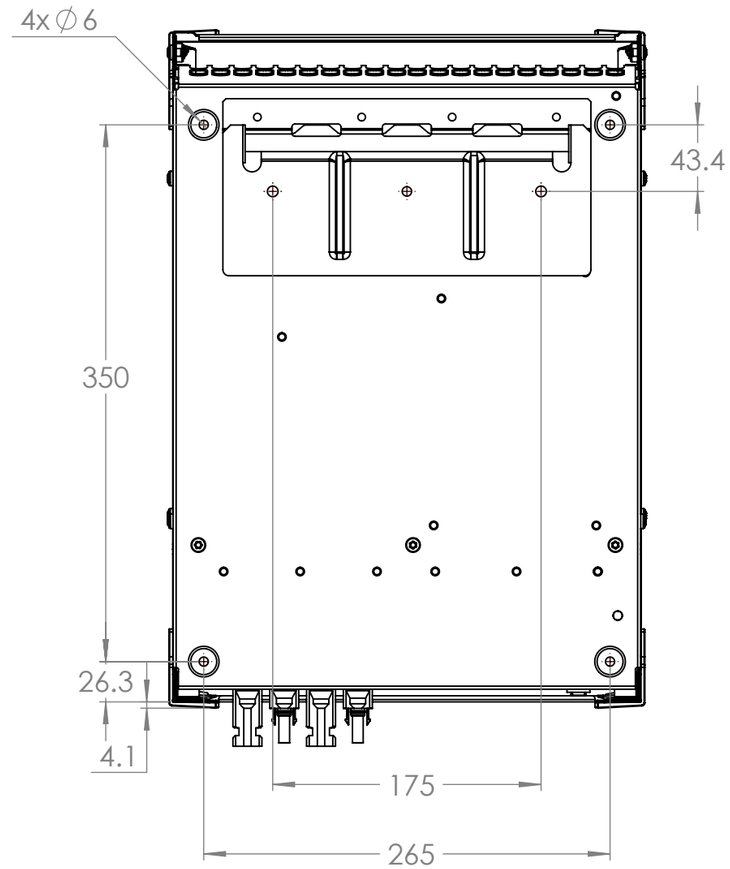

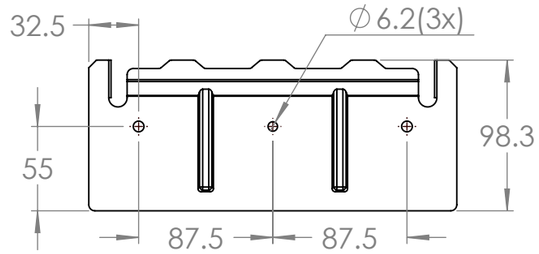

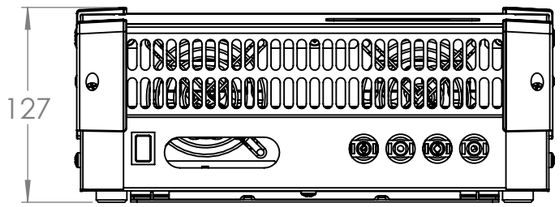

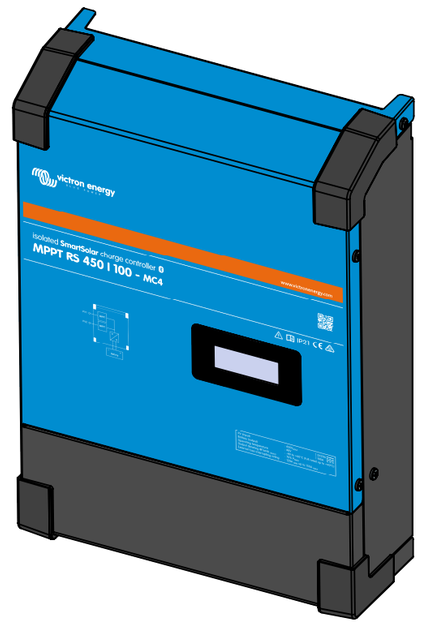

Dimensions in mm

victron energy
BLUE POWER

Rev00