Dimension Drawing - LiFePO4 (NG)	
BAT512130620	LiFePO4 Battery 12,8V/300Ah NG

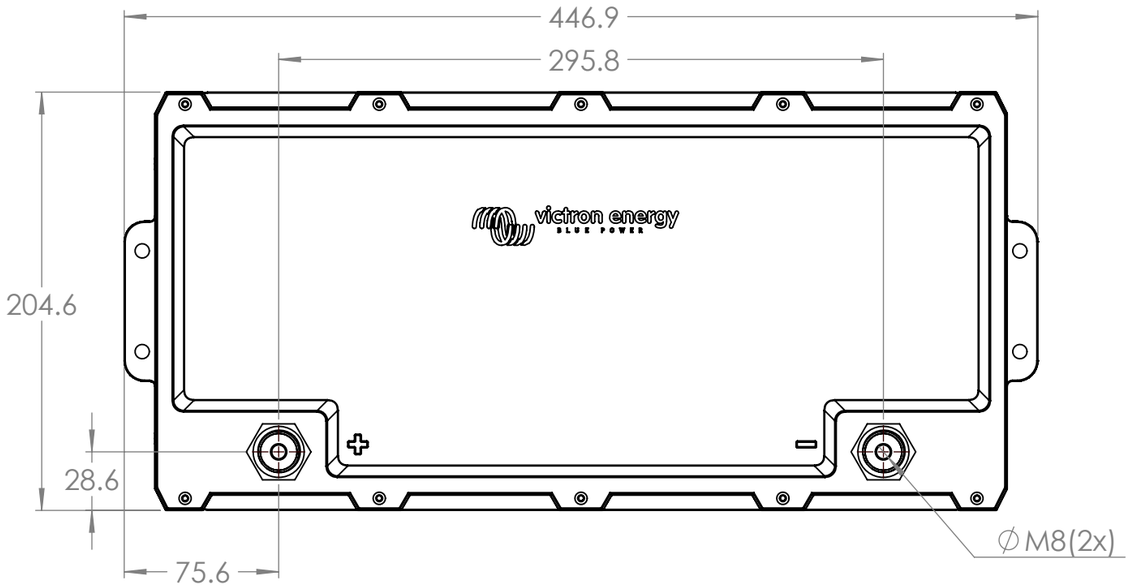

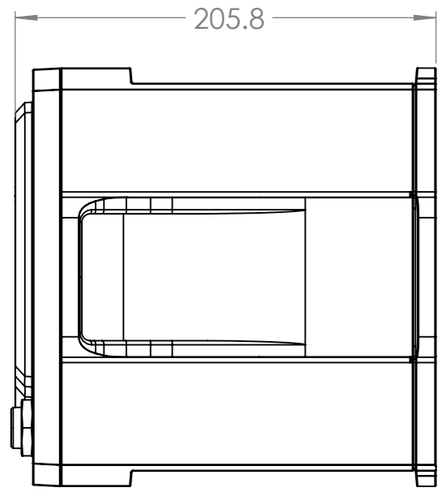

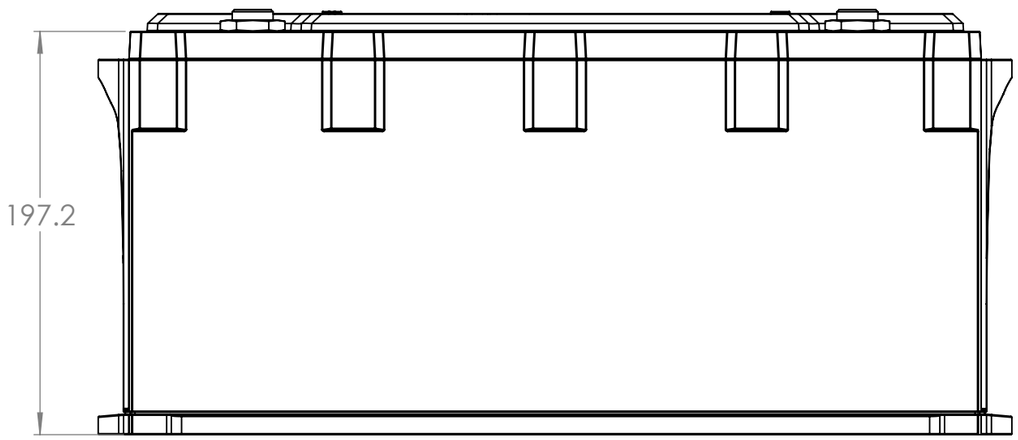

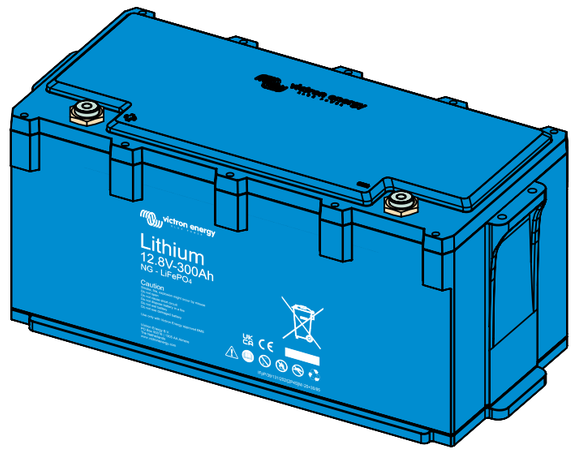

Dimensions in mm

victron energy
BLUE POWER

Rev01