Dimension Drawing - SmartSolar MPPT RS	
SCC145120510	SmartSolar MPPT RS 450/200-MC4

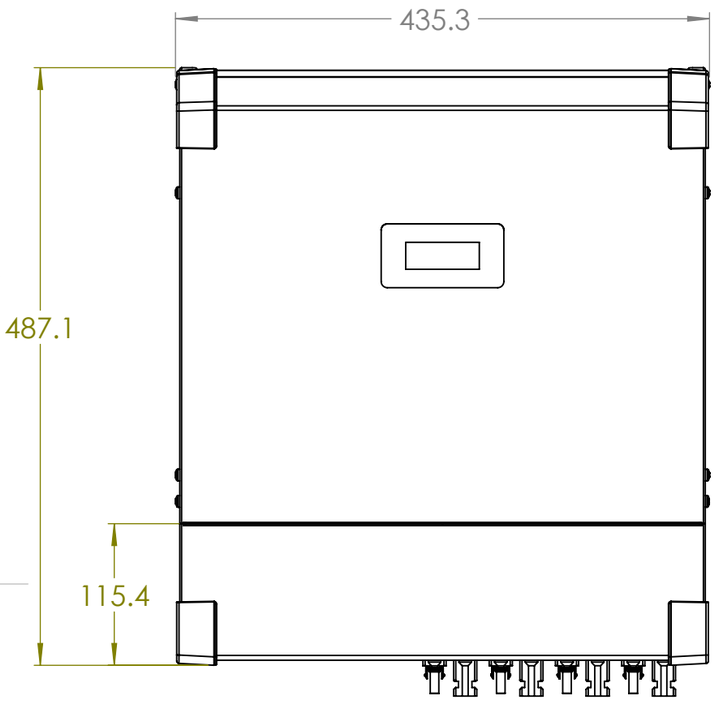

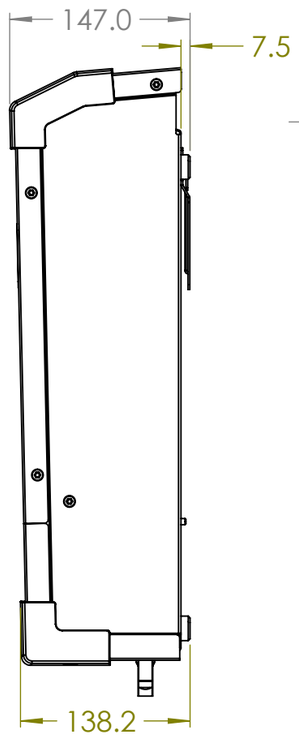

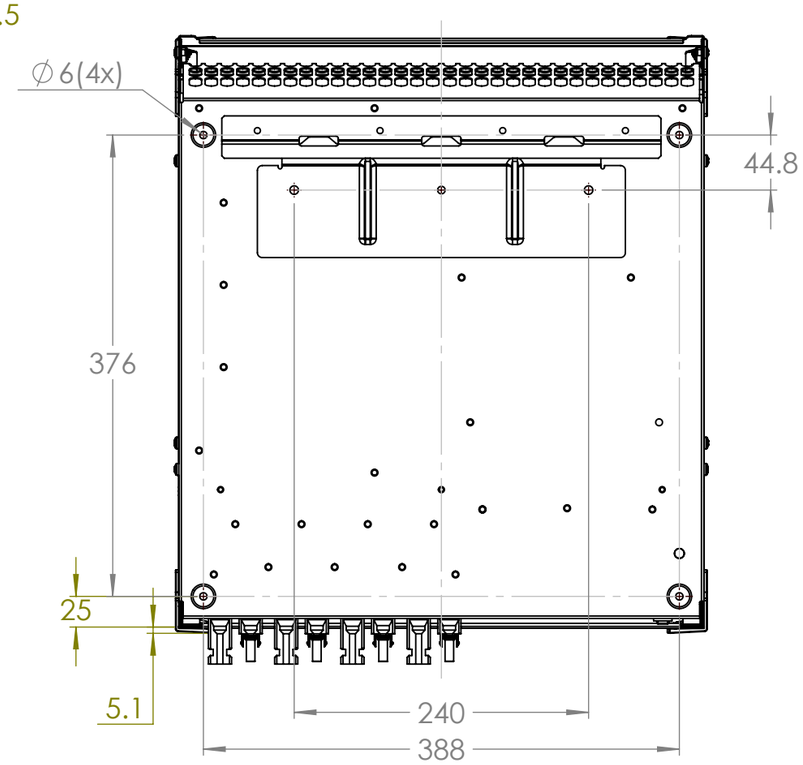

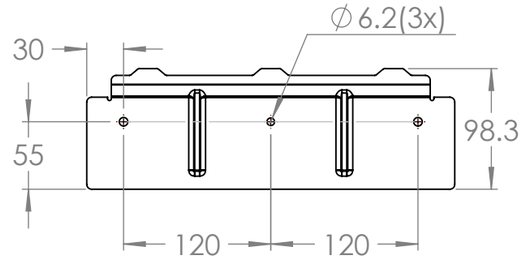

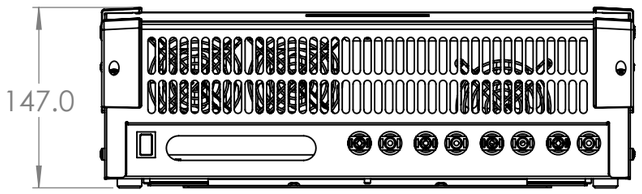

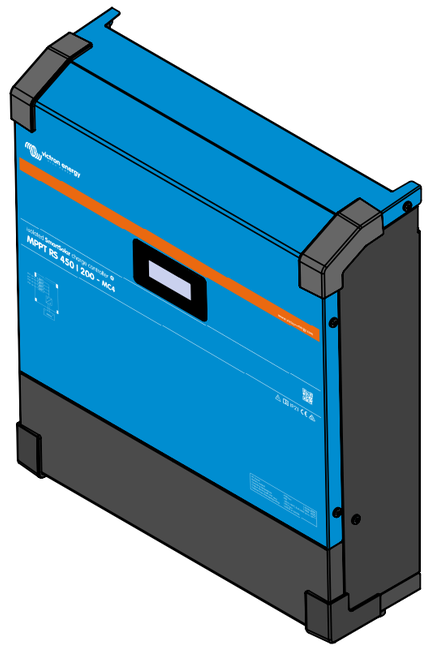

Dimensions in mm

victron energy
BLUE POWER

Rev01